Ductile Iron Wafer Butterfly Valve, Universal, Lever Operator

Model: ABFV-01L



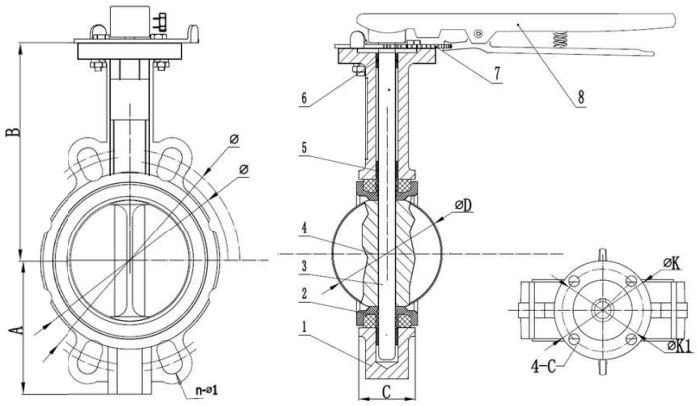

Specification Standards :

- Flange as standard: Class 150/PN10/PN16/JIS10K/JIS5K
- Top mounting flange as standard : ISO5211
- Certificate According to EN10204-3.1

Features :

- Wafer type Connections
- Lever operator

Test Requirement	
Working Pressure	PN16/1.6Mpa
Body Pressure	2.4Mpa
Seat Test Pressure	1.76 Mpa
Applicable Temperature	<120 °C

Materials :

No.	Parts Name	Material	QTY
1	BODY	DI	1
2	SEAT	EPDM	1
3	STEM	SS410	1
4	DISC	CF8	1
5	BUSHING	P.T.F.E.	4
6	O-RING	NBR	1
7	Limit disk	STEEL	1
8	Lever	STEEL	1

Application :

- For general and industrial services
- Applicable medium: water, light oil

Dimensions (mm) :

Size	A	B	C	ØD	K	K1	4-C	PN10/16		ANSI 150		JIS 5K		JIS 10K	
								Ø	n-Ø1	Ø	n-Ø1	Ø	n-Ø1	Ø	n-Ø1
2"	70	140	41	52.9	65	50	4-7	125	4-18	120.6	4-19	105	4-15	120	4-19
2.5"	75	151	44	64.6	65	50	4-7	145	4-18	139.7	4-19	130	4-15	140	4-19
3"	95	161	44	78.9	65	50	4-7	160	4-18	152.6	4-19	145	4-19	150	4-19
4"	110	175	51	104.1	90	70	4-10	180	4-18	190.5	4-19	165	4-19	175	4-19
5"	125	188	55	123.3	90	70	4-10	210	4-18	216	4-23	200	4-19	210	4-23
6"	140	205	55	155.6	90	70	4-10	240	4-22	241.3	4-23	230	4-19	240	4-23
8"	165	237	59	202.5	125	102	4-12	295	4-23	298.6	4-23	280	4-23	290	4-23
10"	201	279	66	250.8	125	102	4-12	350/355	4-23	361.8	4-26	345	4-23	355	4-25
12"	240	310	76	301.6	125	102	4-12	400/410	4-23	431.8	4-26	390	4-23	400	4-25